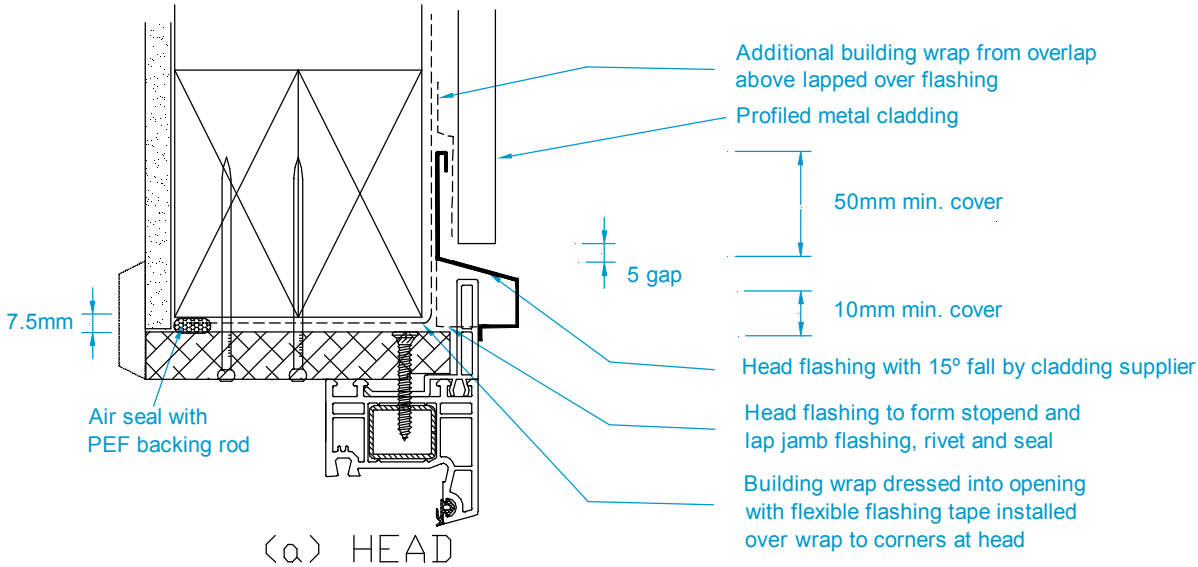

(a) HEAD

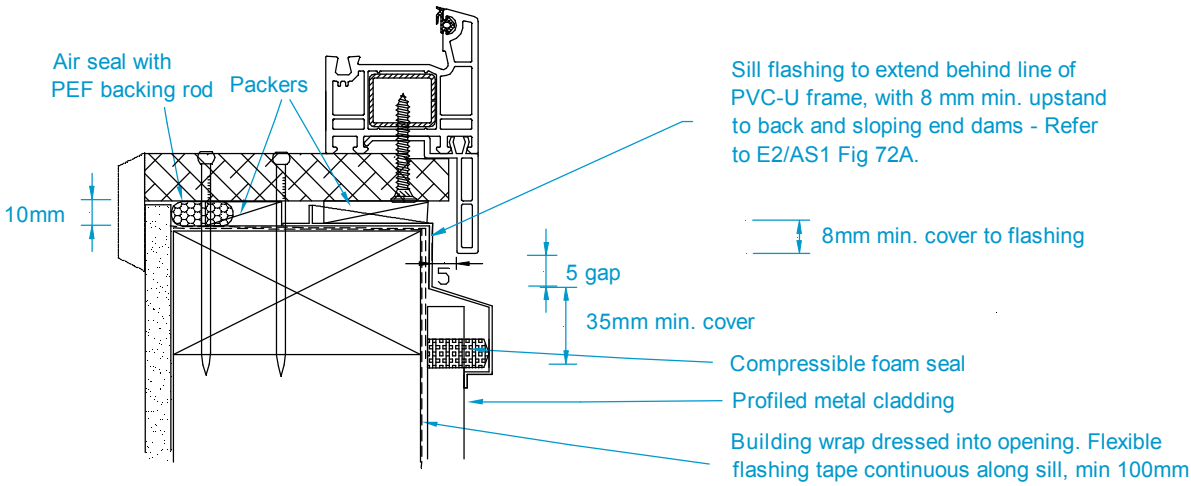

(b) SILL

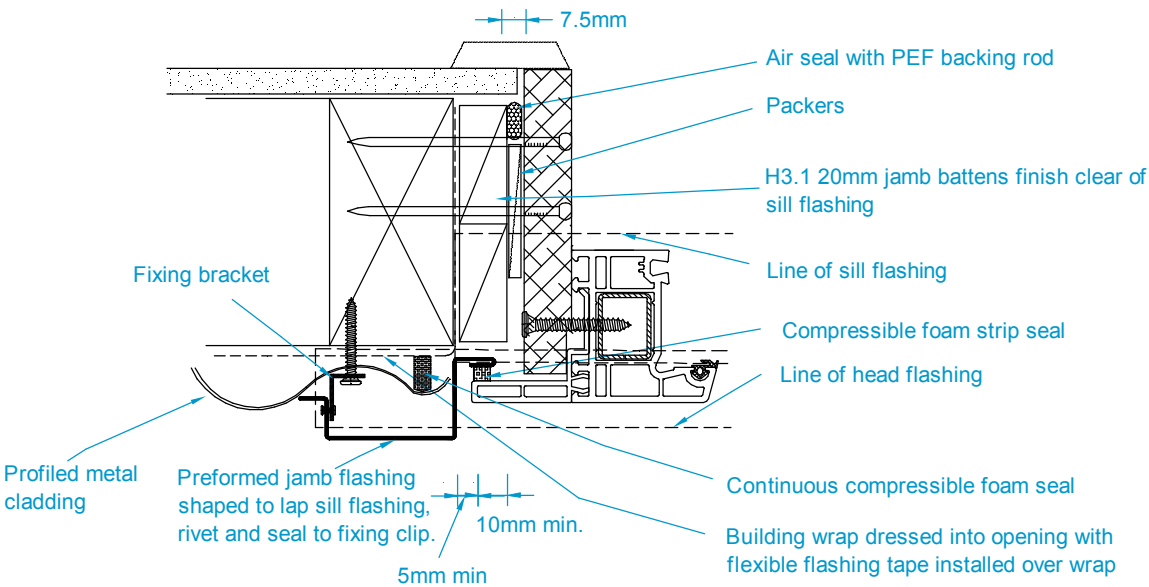

(c) JAMB

NB: For further information, refer to NZBC Acceptable Solution E2/AS1, Fig95