Cavity Construction - Brick Veneer

Premium Series PVC-U Window Installation System

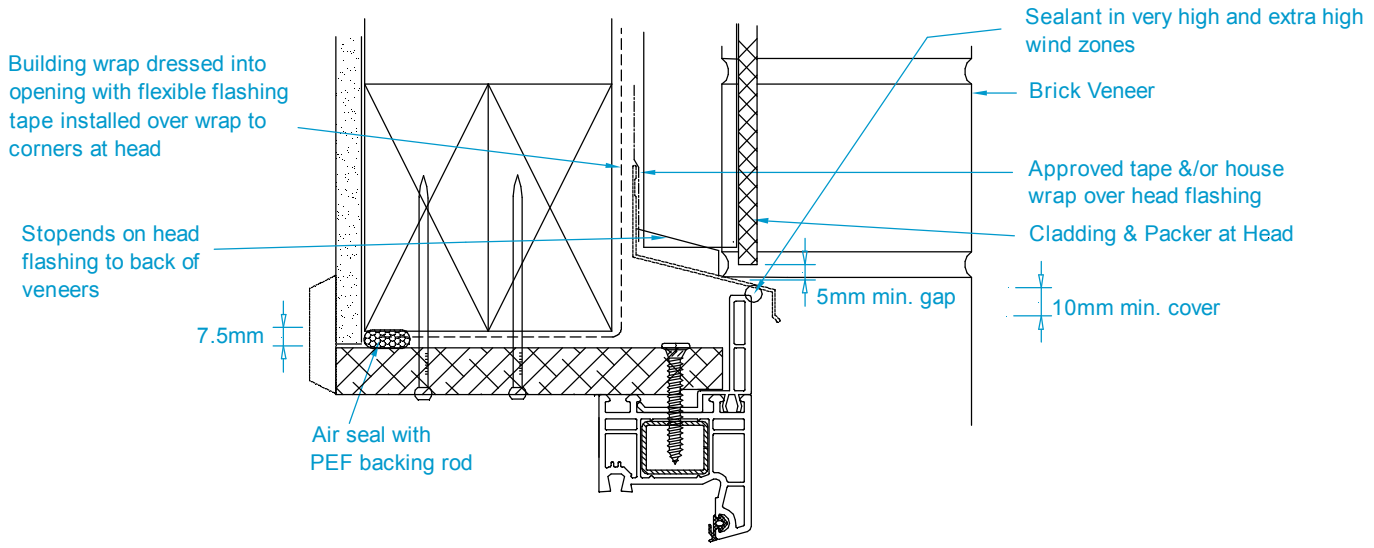

(a) HEAD Timber Cladding Above

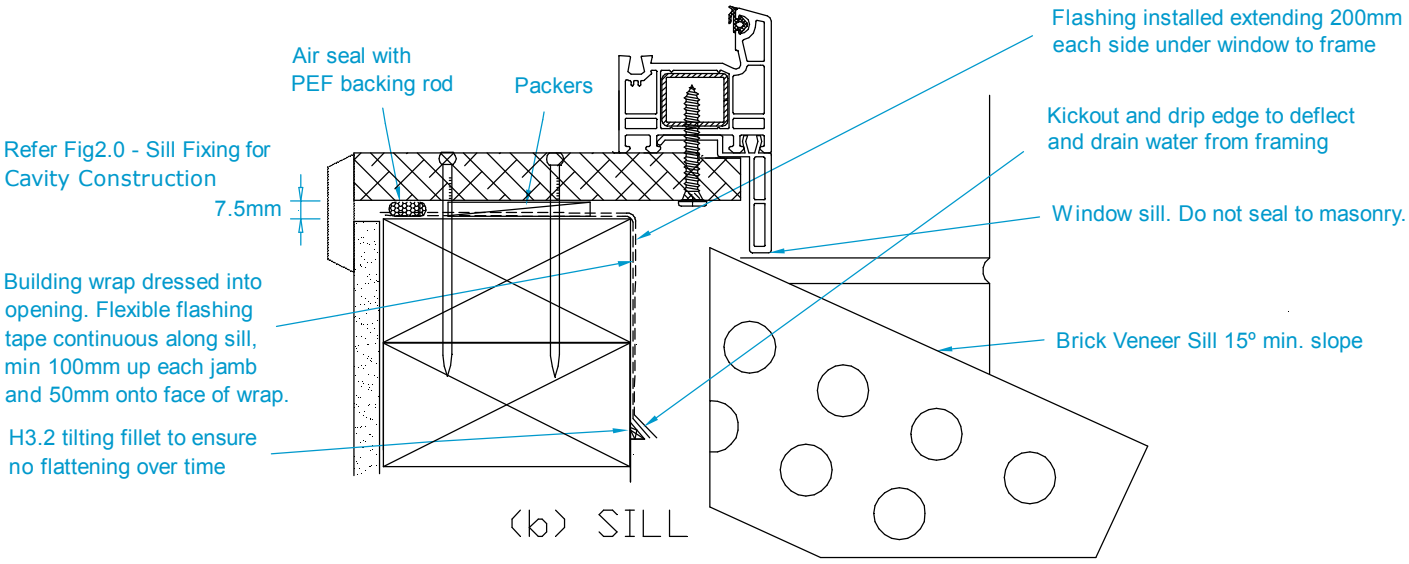

(b) SILL

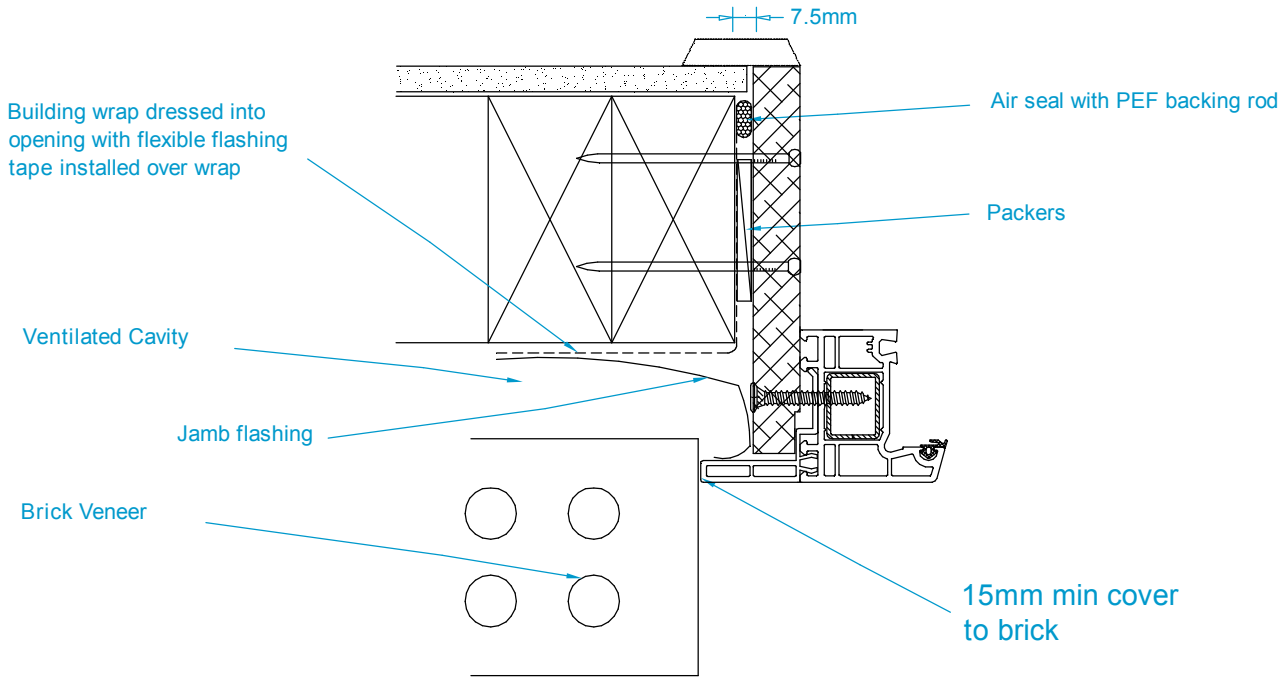

(c) JAMB