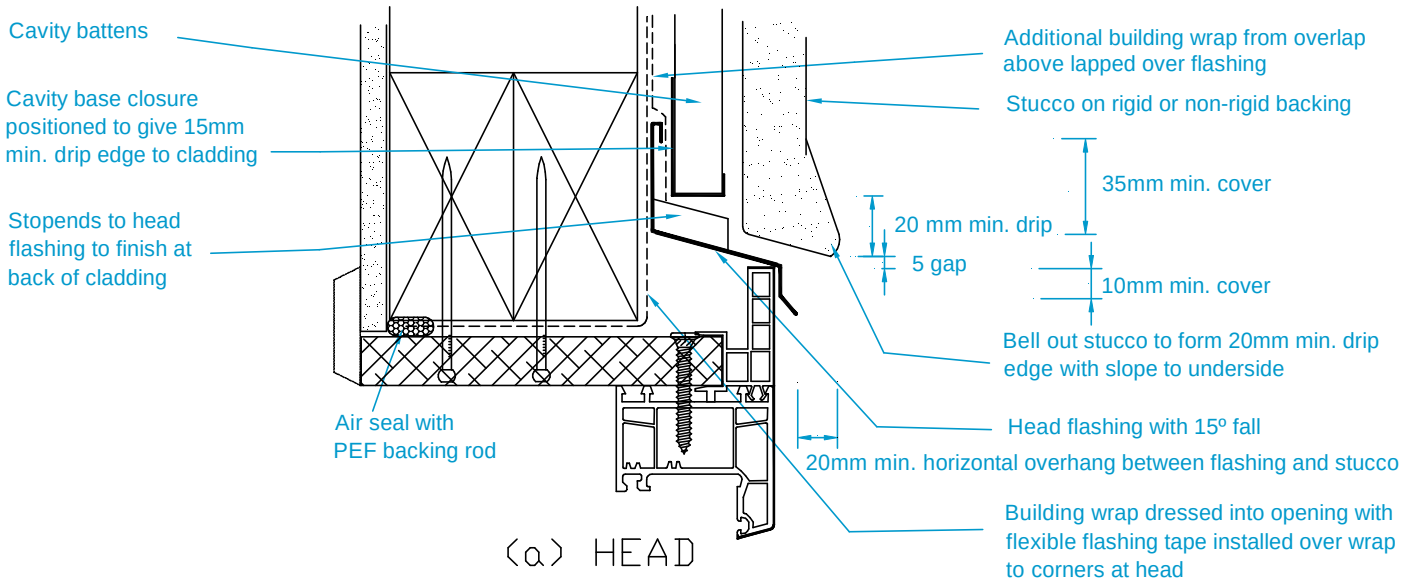

(a) HEAD

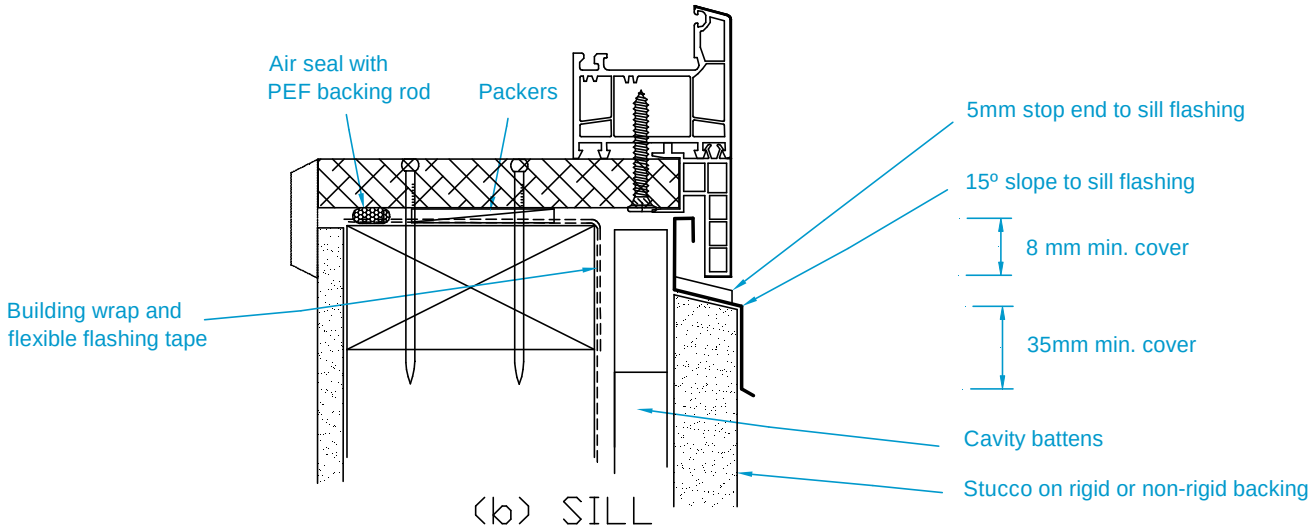

(b) SILL

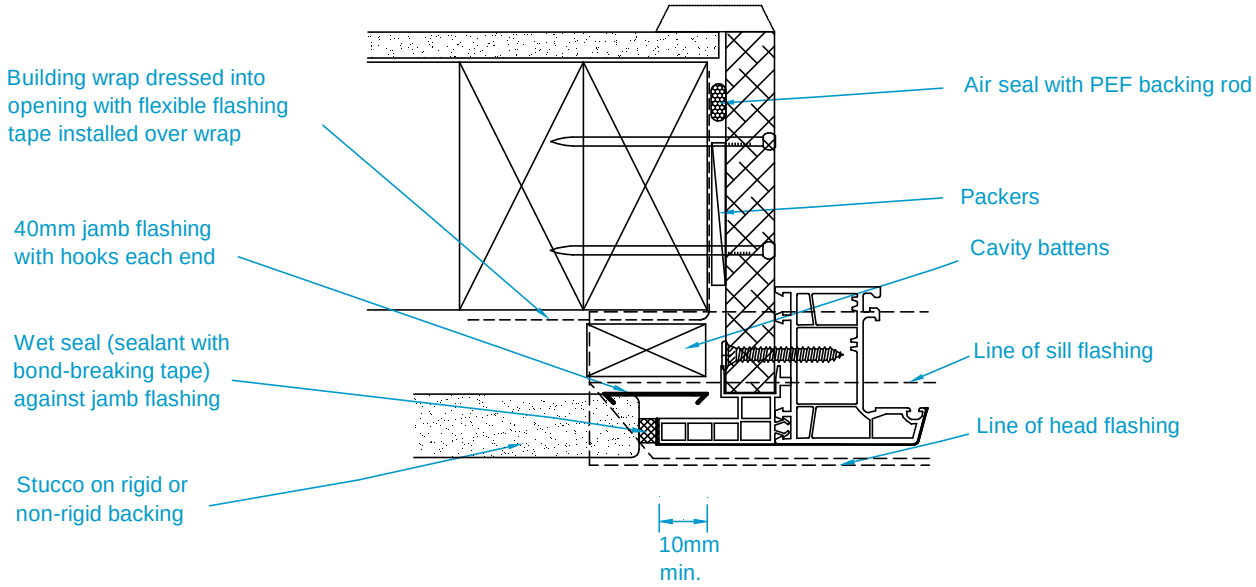

(c) JAMB