Homerit www.homerit.co.nz	Recessed Installation Details -- Brick Veneer	Figure R3 Ver: 1.2 Nov 2024

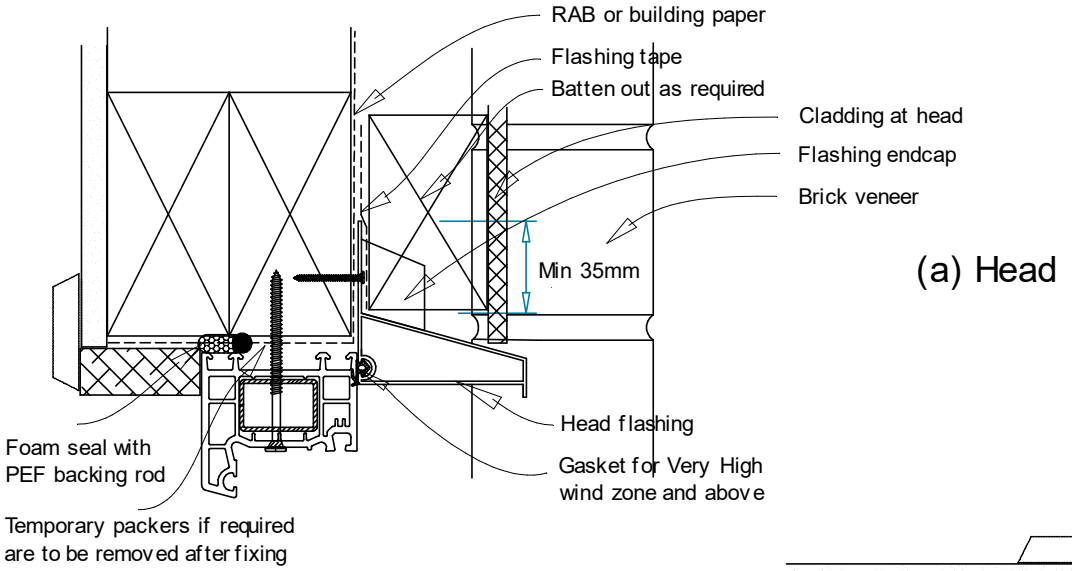

(a) Head

(b) Jamb

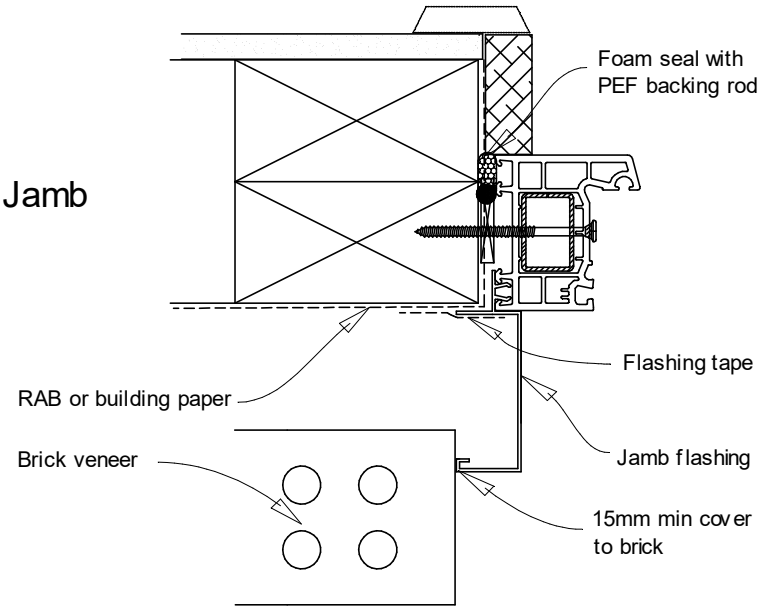

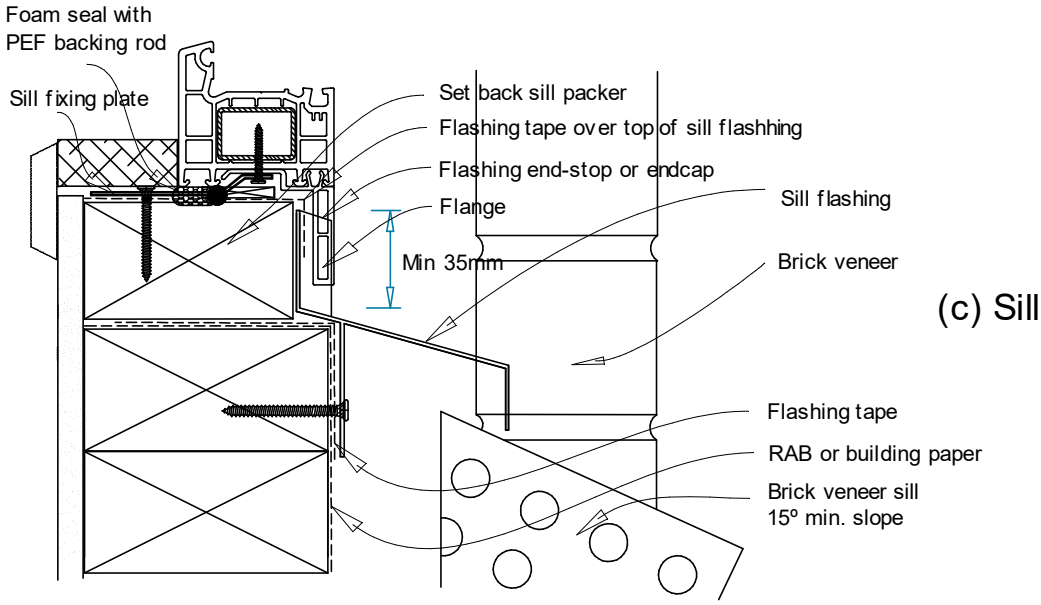

(c) Sill

© NZ Investment and Trading Ltd 2024

Pat. Pending
all IP rights reserved